YANMAR

MINI EXCAVATOR

SV16

Operating weight (canopy / cabin)	1590 / 1730 kg
Engine	3TNV70
Digging force (arm)	7,6 kN
Digging force (bucket)	13,7 kN

Reliability and compactness

COMPACTNESS

The SV16 was conceived to offer excellent performances in a compact design. It combines power, handiness and stability to make your workday easier and more productive.

YANMAR ENGINE

The YANMAR TNV engine has been designed to combine high power and cleaner emissions. With its sophisticated injection system, it meets the European Commission (EC) emission standards. Its quiet operation makes this engine friendly to people and the environment.

BEST COMPONENTS

Design and performance of the components made for heavy-duty job sites and long service life.

MAINTENANCE

Simple maintenance structure for fast and easy access to all components. Facilitated daily checks.

CABIN

The use of a ROPS structure for the cab guarantees the operator safety in a roll-over. The canopy and cab also conform to FOPS1 standards (concerning structures protecting against falling objects) and TOPS (Tip Over Protective Structures).

EASE OF USE

Ideally located, the second gear control knob (located on the blade lever) and the control levers offer exceptional movement precision. A proportional control auxiliary line allows a perfect mastery of the accessories.

COMFORT

The SV16 cab interior architecture has been studied to improve the operator driving position and to facilitate his work, particularly on the long and challenging work sites.

UNMATCHED COMPACTNESS

THE SV16 HAS EXCELLENT PERFORMANCE IN A COMPACT PACKAGE. IT IS IDEAL FOR URBAN WORK (NO OBLIGATION TO BLOCK 2 TRAFFIC LANES) AND FOR LANDSCAPING.

COMPACT SIZE FOR EASY TRANSPORT

- A transportation weight of only 1515 kg* and a very compact undercarriage enable the SV16 to be transported with its accessories on a trailer. Quick loading and easy transfer from one site to another enable to improve the productivity.
- 4 anchor points facilitate the fixation of the machine during transport.

* Canopy version

HIGH PERFORMANCE

Based on our unique experience and expertise, Yanmar produces reliable mini-excavators with high performance. The SV16 is equipped with all the necessary equipment to guarantee you an exceptional productivity.

FLOW-SHARING CLOSED-CENTER HYDRAULIC SYSTEM

The SV16 hydraulic circuit is characterized by the proportional distribution of the flow rates. This system guarantees precision, flexibility, power and perfect simultaneity of movements. It allows the operator to perform all movements with an excellent performance, regardless of the flow rate or the load. The joysticks are very easy to handle and makes operator control of the machine's work even easier.

COMFORT

LARGE COMFORTABLE CABIN

The SV16 cab interior is very spacious for maximum freedom of movement. The large legroom allows the operator to work comfortably for long hours. The entrance, which is also very large, provides easy cab access and exit.

The SV16 is equipped in standard with a comfortable seat with multiple adjustments.

EXCELLENT AIR CIRCULATION

The SV16 has a heater that can work at a pleasant temperature in extreme weather conditions. The vents are placed to ensure a uniform temperature within the cabin and ensure a perfect window demisting.

DIGITAL INTERFACE

The SV16 is equipped with a digital interface which informs the operator in real time about the status of his machine. Perfectly integrated into the right hand console, the 3.3" screen provides excellent visibility. The interface provides the customer with useful information through LED lamps, or indications about important elements like fuel consumption, fuel gauge, coolant temperature gauge, etc...

The interface assists the customer for maintenance intervals and to program such interventions. It also works as a diagnostic tool in case of malfunction by sending an error code and an information icon on the display.

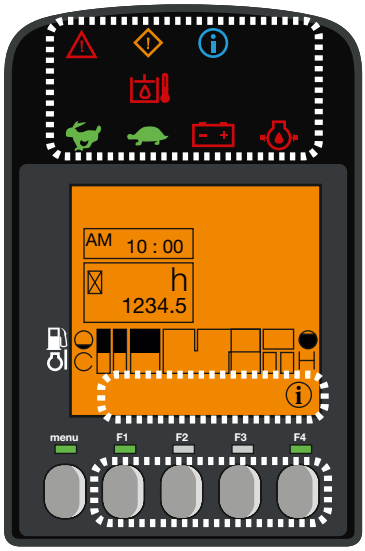

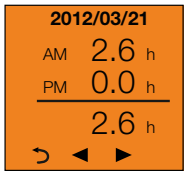

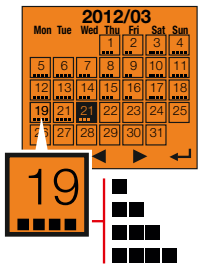

SECURITY

Because one is more effective in a safe and secure environment, the safety of the operator and the people working around the machine is one of our priorities.

OPTIMUM VISIBILITY FOR EFFICIENT AND SAFE WORK

The SV16 is equipped with 3 rear and side view mirrors. The operator can control the work area as well as the area around the machine without moving from his seat. In order to work efficiently and accurately in darkness, the SV16 comes with a standard LED light positioned in the lower part of the boom, where it is protected from shocks. The LED technology provides a powerful light while reducing energy consumption and increasing the life of the battery. A beacon and 3 additional LED lamps can optionally be added on the cab.

MAINTENANCE AND RELIABILITY

The SV16 perfectly meets the reputation for quality and durability of the Yanmar machines. The excellent accessibility to components and speed of maintenance and cleaning operations allow achieving excellent levels of onsite availability.

YANMAR FULL PROTECT

DESIGNED TO LAST

- Structure of the chassis and durable steel covers provide foolproof resistance.
- Large counterweight protects against possible shocks and friction against the walls.
- Hoses protection with abrasion-resistant sleeves. Routing on the top of the boom and on the right side of the machine to avoid risk of torsion.
- Connections of the cylinders to the blade and the boom fully protected by steel plates.
- Form stringers prevents accumulation of soil and reduces internal track wear.

EASY MAINTENANCE

The rear and side covers, the panel under the seat and the removable floor provide direct access to the service points to reduce the maintenance time and cost. The blade cylinder flexible is made of two parts for quick replacement in case of perforation.

EQUIPMENT

[STANDARD EQUIPMENT]

PERFORMANCE

3TNV70-XBVA2 Yanmar diesel | Meets EN standards | Indirect Injection | Water separator | LUDV Hydraulic circuit: flow sharing | 1 auxiliary circuit with proportional control | 2nd speed | Hydraulic oil gauge | 1 LED light integrated into the boom

COMFORT

LCD Interface | Heating | Fabric covered, adjustable and reclining seat | Adjustable wrist support | Foot rests | Windshield in 2 parts (retractable upper part) | Double sliding right side window | Transparent upper front part | Wipers | Windshield washer | Automatic ceiling lamp | 2 x 12V outlets | Storage boxes | Lockable document storage | Cup holder

SAFETY AND DURABILITY

Handrails | Safety lever | Safety belt | Hammer for evacuation | 3 mirrors | Horn | 4 anchor points (2 on the undercarriage, 2 on the blade) | Blade cylinder supply hose into two parts | Complete protection of the cylinders (blade, boom and arm) | Hoses protected by abrasion-resistant and projection-resistant sleeves | Cationic treatment of steel parts | Lockable engine bonnet and trapdoor of the fuel tank | System antidrop for trapdoor of the fuel tank

MISCELLANEOUS

Fuel gauge | Toolbox | Toolkit | Grease pump

[OPTIONAL EQUIPMENT]

EQUIPMENT AND PERFORMANCE

Special paint | Long arm (+ 200 mm) | Potentiometers on 3rd circuit | Quick couplings | Bio oil | 2 LED front lights on the cabin | 1 LED rear light + flashing LED light | 1 LED beacon

COMFORT AND EASE OF USE

Skaï seat | Radio with USB plug and SD card player | Central greasing | Wide travel pedals

SAFETY AND DURABILITY

Safety valves for lifting | Anti-theft (key/keyboard) | GPS Tracking | Translation alarm

[ACCESSORIES]

Yanmar gives you the accessories that fit your needs and match the safety standards in force in your country: mechanical quick coupler, hydraulic quick coupler, ditching bucket, swinging bucket, backhoe bucket, hydraulic hammer...

DIMENSIONS

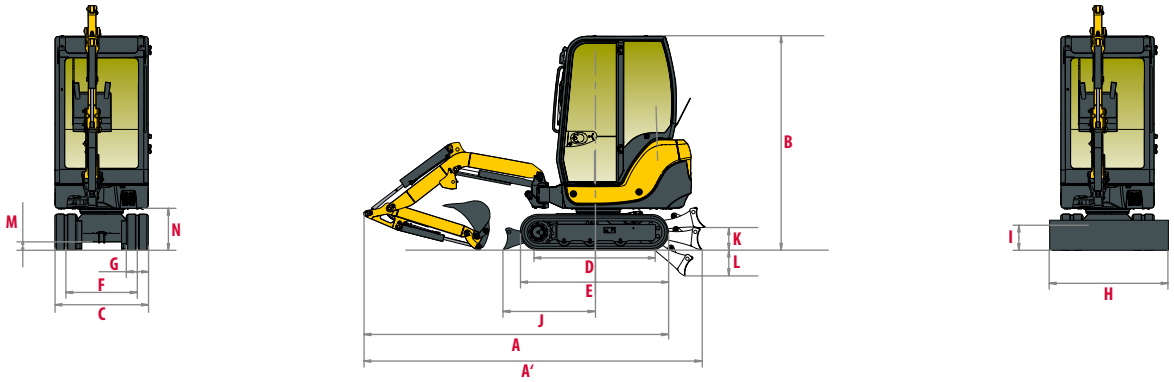

A	Overall length	3450 / 3485 * mm	H	Overall blade width	980 mm
A'	Overall length with blade at the back	3565 / 3600 * mm	I	Overall blade height	230 mm
B	Overall height	2215 / 2280 ** mm	J	Blade distance	1095 mm
C	Overall width	980 mm	K	Max. blade height above the ground	240 mm
D	Length of track on ground	1180 mm	L	Max. lowering blade depth	300 mm
E	Undercarriage length	1560 mm	M	Minimum ground clearance	190 mm
F	Lane	750 mm	N	Ground clearance under counterweight	410 mm
G	Track width	230 mm			

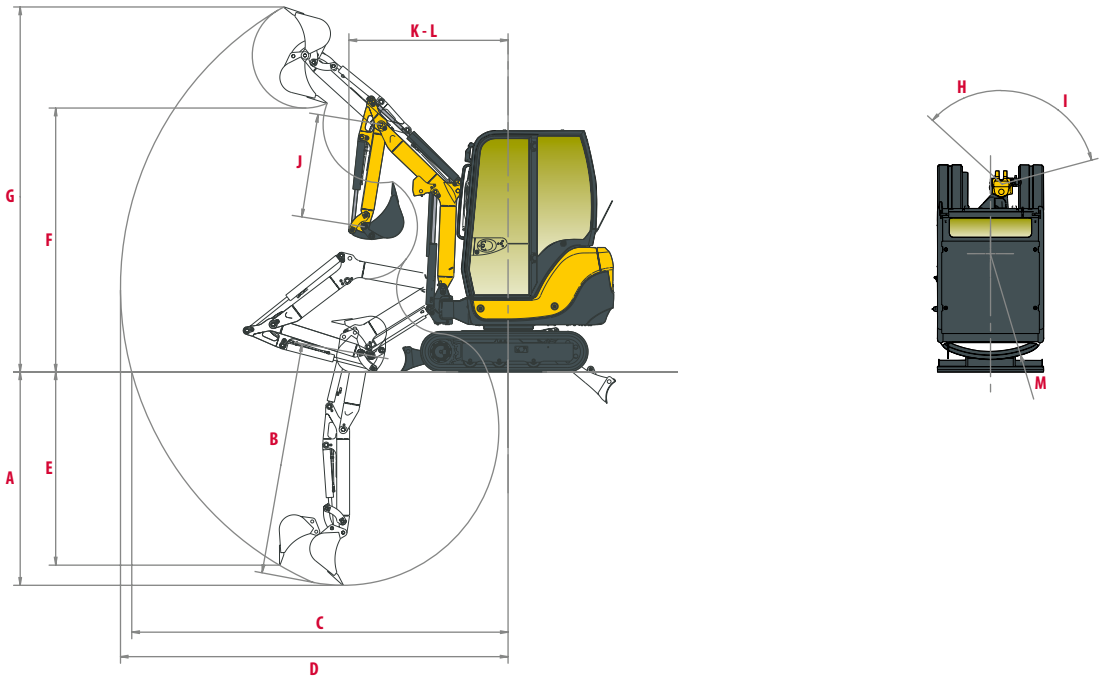

A	Max. digging depth - Blade lifted	2005 - 2205 * mm	H	Boom swinging base to left	41°
B	Max. digging depth - Blade lowered	2160 - 2360 * mm	I	Boom swinging base to right	77°
C	Max. digging reach on ground	3530 - 3725 * mm	J	Arm length	960 - 1160 * mm
D	Max. digging reach	3635 - 3825 * mm	K	Minimum front swing radius	1480 - 1520 * mm
E	Max vertical wall	1710 - 1920 * mm	L	Minimum front swing radius with boom swing	1290 - 1320 * mm
F	Max. dumping height	2440 - 2575 * mm	M	Rear swing radius	980 mm
G	Max. cutting height	3460 - 3590 * mm			

* With long arm / ** Canopy - Cabin
Subject to technical modifications. Dimensions in mm with specific Yanmar bucket.

LIFTING FORCE

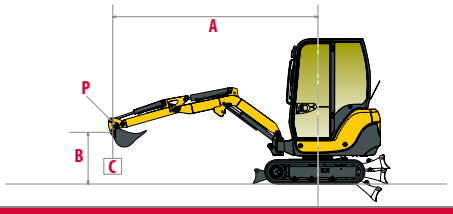

Tipping load, rating over front

Tipping load, rating over side 90°

Cabin, standard arm

A	Blade on ground Max.		3,5 m		3 m		2,5 m		2 m		1,5 m		Blade above ground Max		3,5 m		3 m		2,5 m		2 m		1,5 m		
B																									
2,5 m	*320	*320	-	-	-	-	-	-	-	-			*320	*320	-	-	-	-	-	-	-	-			C
2 m	240	*330	-	-	-	-	*305	*310	-	-			240	*330	-	-	-	-	*305	*305	-	-			
1,5 m	215	*340	-	-	-	-	280	*340	-	-			215	*340	-	-	-	-	280	*340	-	-			
1 m	200	*345	-	-	-	-	270	*390	370	*485			200	270	-	-	-	-	270	300	370	*485			
0,5 m	200	*360	-	-	-	-	275	*450	360	*595			200	270	-	-	-	-	275	350	360	480			
0 m	210	*370	-	-	-	-	260	*475	350	*640	500	1010	210	275	-	-	-	-	260	345	350	465	500	705	
-0,5 m	230	*385	-	-	-	-	260	*450	345	*615	500	900	230	305	-	-	-	-	260	345	345	470	500	700	
-1 m	285	*390	-	-	-	-	-	-	350	*530	540	755	285	*390	-	-	-	-	-	-	350	*530	540	755	

Cabin, long arm

A	Blade on ground Max.		3,5 m		3 m		2,5 m		2 m		1,5 m		Blade above ground Max		3,5 m		3 m		2,5 m		2 m		1,5 m		
B																									
2,5 m	*250	*250	-	-	-	-	-	-	-	-	-	-	*250	*250	-	-	-	-	-	-	-	-	-	-	C
2 m	225	*270	-	-	-	-	*240	*240	-	-	-	-	225	*270	-	-	-	-	*240	*240	-	-	-	-	
1,5 m	200	*290	-	-	225	*280	*255	*270	-	-	-	-	200	*290	-	-	225	*280	*255	*270	-	-	-	-	
1 m	190	*280	-	-	220	*285	280	*320	*380	*420	*570	*635	190	*280	-	-	220	*285	280	*320	*380	*410	*570	*620	
0,5 m	185	*295	-	-	210	*315	265	*370	360	*510	565	*745	185	245	-	-	210	*315	265	*370	360	*510	565	*745	
0 m	193	*305	-	-	195	*325	270	*425	360	*590	525	*845	195	*305	-	-	195	*325	270	*425	360	510	525	730	
-0,5 m	210	*330	-	-	-	-	265	*440	360	*610	530	*930	210	*330	-	-	-	-	265	365	360	500	530	730	
-1 m	250	*335	-	-	-	-	-	-	365	*560	565	*950	250	*335	-	-	-	-	-	-	365	*560	565	*760	

Canopy, standard arm

A	Blade on ground Max.		2,5 m		2 m		1,5 m		Blade above ground Max		2,5 m		2 m		1,5 m		
B																	
2,5 m	230	*305	-	-	-	-	-	-	230	*305	-	-	-	-	-	-	C
2 m	185	*310	230	*290	-	-	-	-	185	*310	230	*290	-	-	-	-	
1,5 m	165	*320	225	*320	-	-	-	-	165	250	225	*320	-	-	-	-	
1 m	150	*325	210	*370	295	*465	-	-	150	215	210	290	295	*465	-	-	
0,5 m	155	*340	215	*430	280	*575	-	-	155	215	215	285	280	390	-	-	
0 m	165	*350	205	*455	275	*625	395	*990	165	220	205	280	275	380	395	570	
-0,5 m	180	*365	200	*435	275	*600	405	*880	180	245	200	280	275	380	405	570	
-1 m	230	*370	-	-	280	*510	455	*735	230	305	-	-	280	390	455	625	

Canopy, long arm

A	Blade on ground Max.		3,5 m		3 m		2,5 m		2 m		1,5 m		Blade above ground Max		3,5 m		3 m		2,5 m		2 m		1,5 m		
B																									
2,5 m	*245	*265	-	-	-	-	-	-	-	-	-	-	*245	*265	-	-	-	-	-	-	-	-	-	-	C
2 m	190	*270	-	-	-	-	*240	*240	-	-	-	-	190	*270	-	-	-	-	*240	*240	-	-	-	-	
1,5 m	165	*290	-	-	190	*280	*255	*270	-	-	-	-	165	230	-	-	190	*280	*255	*270	-	-	-	-	
1 m	160	*280	-	-	180	*285	235	*320	*380	*410	*570	*620	160	210	-	-	180	*285	235	*320	*380	*410	*570	*620	
0,5 m	150	*295	-	-	175	*315	230	*370	295	*510	460	*745	150	210	-	-	175	240	230	*370	295	*510	460	*745	
0 m	160	*305	-	-	160	*325	225	*425	295	*590	420	*845	160	225	-	-	160	245	225	315	295	435	420	620	
-0,5 m	175	*330	-	-	-	-	220	*440	295	*610	420	*930	175	245	-	-	-	-	220	315	295	430	420	615	
-1 m	210	*335	-	-	-	-	-	-	300	*560	460	*950	210	285	-	-	-	-	-	-	300	440	460	*760	

[The data contained in these tables represent the lifting capacity in accordance with ISO standard 10567. They don't include the weight of the bucket and correspond to 75% of the maximum static tipping load or 87% of the hydraulic lifting power. Data marked * are the hydraulic limits of the lifting power.]

TECHNICAL SPECIFICATIONS

[WEIGHT +/- 2% (EN-STANDARDS)]

	Canopy		Cabin	
Operating weight (rubber tracks)	1590 kg	0,26 kg/cm²	1730 kg	0,27 kg/cm²
Transport weight (rubber tracks)	1515 kg	0,25 kg/cm²	1655 kg	0,26 kg/cm²

[ENGINE]

Type	3TNV70-XBVA2
Fuel	Diesel
Net Power	12.1 kW / 16.5 HP / 2600 rpm
Gross Power	12.5 kW / 17.1 HP / 2600 rpm
Displacement	854 cm³
Maximum torque	53 N.m. / 1800 rpm
Cooling	Liquid
Starter	1,4 kW
Battery	12 V - 45 Ah
Alternator	12 V - 40 A

[HYDRAULIC SYSTEM]

Maximum pressure	176 B
1 gear pump	34 l/min

PTO	Theoretical data at 176 B	
	Pressure	Oil Flow
	0 ~ 176 bars	34 l/min
	0 ~ 176 bars	34 l/min

The oil flow decreases as the pressure increases

[PERFORMANCE]

Travel speed	1,7 / 3,3 km/h
Rotation speed	10 rpm
Digging force (arm)	7.6 kN / 6.55 kN (with long arm)
Digging force (bucket)	13,7 kN
Traction force	15,3 kN
Grade ability	30°
Noise level (2000/14/CE & 2005/88/CE)	92 dB(A) / 80 dB(A)

[UNDERCARRIAGE]

Number of bottom rollers	3
Track tensioning system	Using grease pump

[CAPACITIES]

Fuel tank	24,5 l
Cooling system	3,2 l
Engine oil	2,8 l
Hydraulic system	28,5 l
Hydraulic tank	20 l

MAINTENANCE FREQUENCY

[Change engine oil and filter: **500 hours**] [Change fuel filter: **250 hours**] [Change hydraulic oil filter: **500 hours**]
[Change hydraulic oil filter: **1000 hours**] [Change cooling fluid: **2000 hours**]

YANMAR

Yanmar Construction Equipment Europe
25, rue de la Tambourine, 52100 SAINT-DIZIER
France

ycee-contact@yanmar.com

www.yanmarconstruction.eu

Non contractual pictures - Printed in France - The manufacturer reserves the right to modify the information in this catalogue without notice. For further information, please contact your authorized Yanmar Construction Equipment dealer.

GB_SV16_0117